COPYRIGHT 2009 by THORLABS GmbH

REV. #	DESCRIPTION:	NAME/DATE:
A	INITIAL RELEASE	Hit. 04/30/09

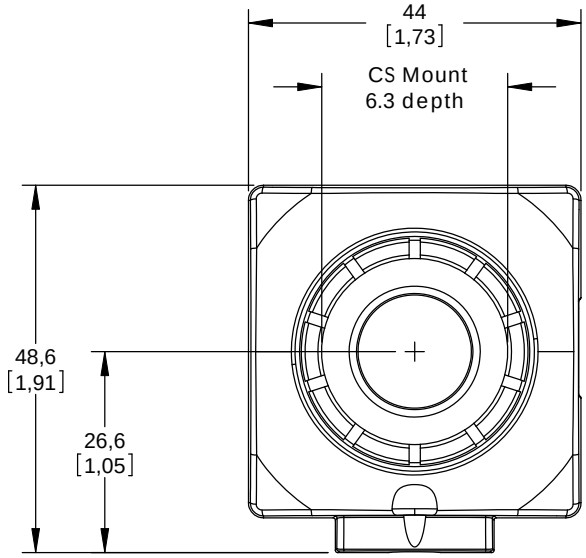

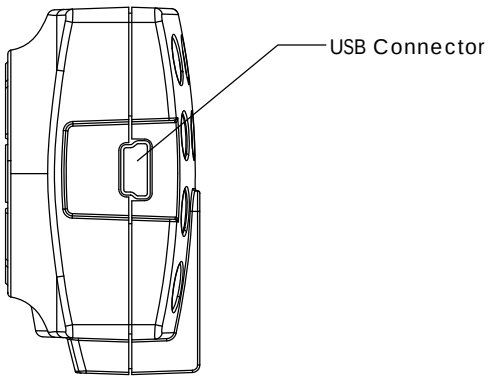

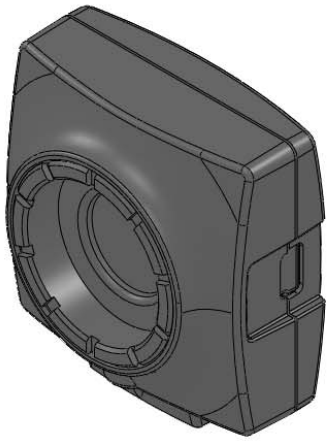

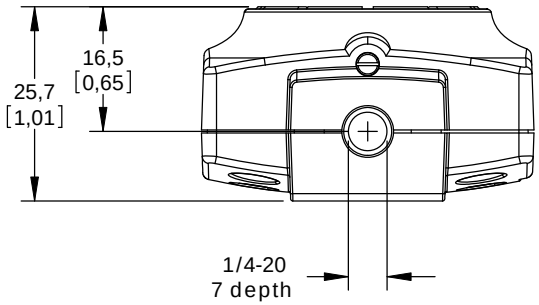

INFORMATION ONLY,
NOT FOR MANUFACTURING

TOLERANCES		NAME	DATE
UNLESS OTHERWISE SPECIFIED:	DRAWN	Hit.	04/30/09
DIMENSIONS ARE IN mm [INCHES]	ENG APPR.		
	MFG APPR.		

PROPRIETARY AND CONFIDENTIAL

THE INFORMATION CONTAINED IN THIS DRAWING IS THE SOLE PROPERTY OF THORLABS, INC. ANY REPRODUCTION IN PART OR AS A WHOLE WITHOUT THE WRITTEN PERMISSION OF THORLABS, INC. IS PROHIBITED.

THORLABS INC. PO BOX 366 NEWTON NJ

TITLE: DCC 1645C

MATERIAL:

SIZE A | REV. A

SCALE: 1 : 1 | SHEET 1 OF 1

DWG. NO. 19417-E01 | PART NO. DCC 1645C

5 4 3 2 1